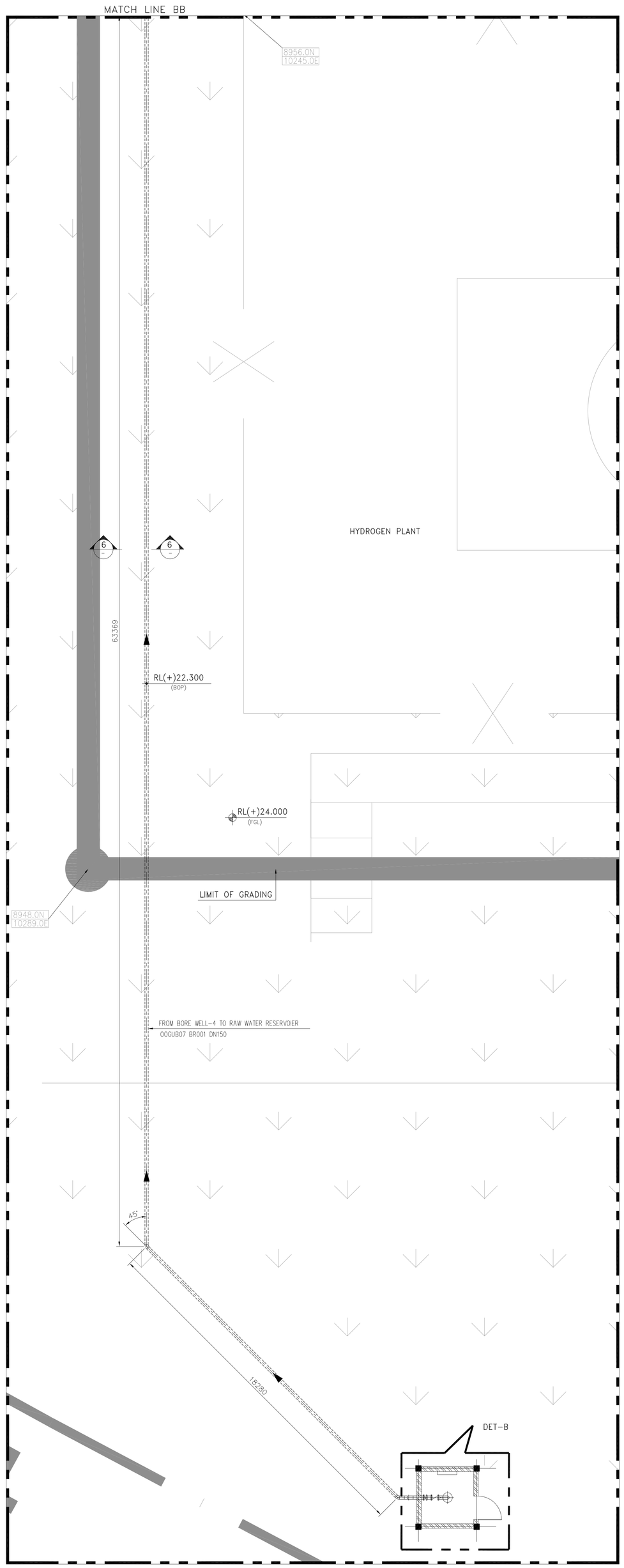

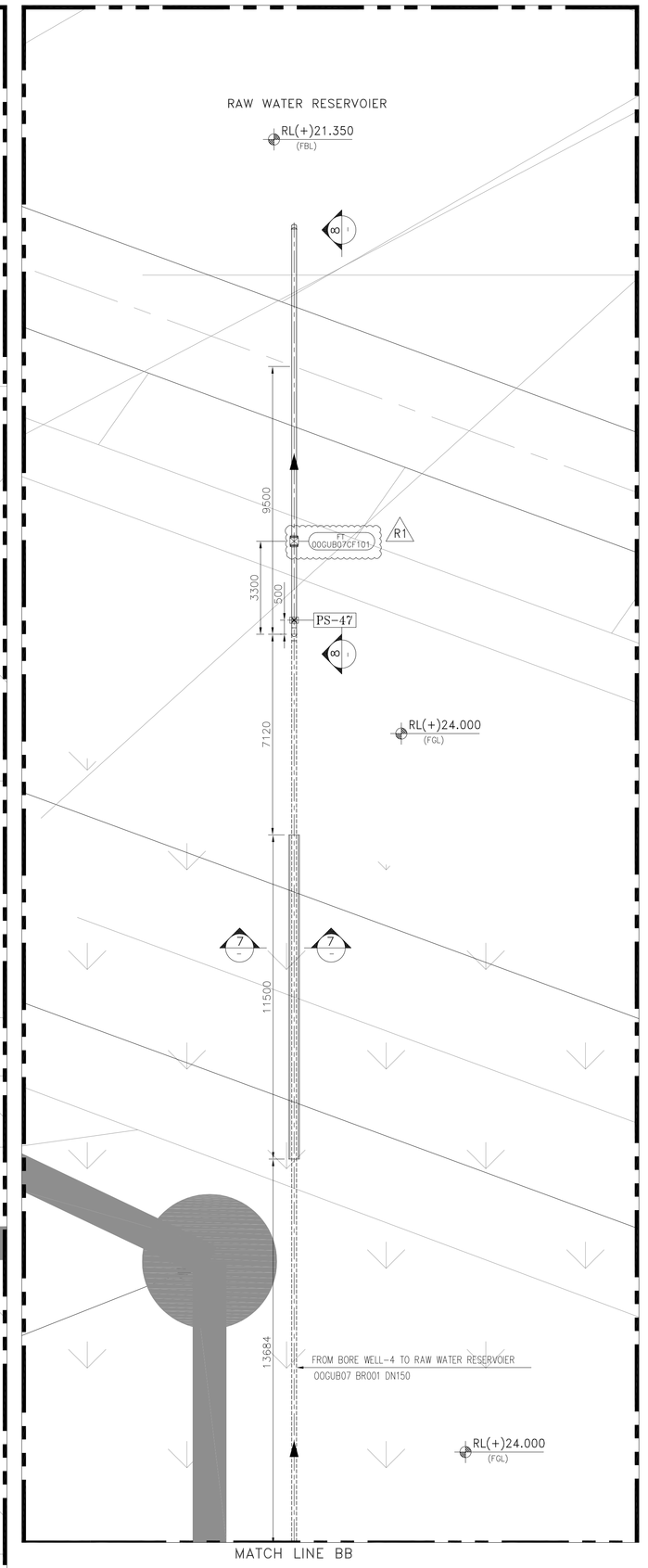

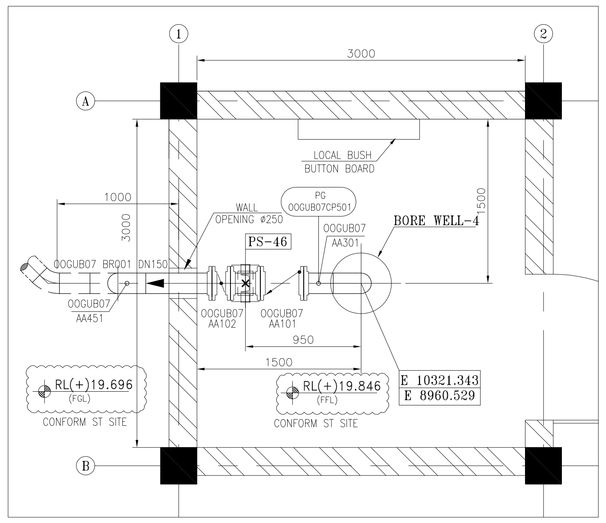

DETAIL-B
(SCALE- 1:25)

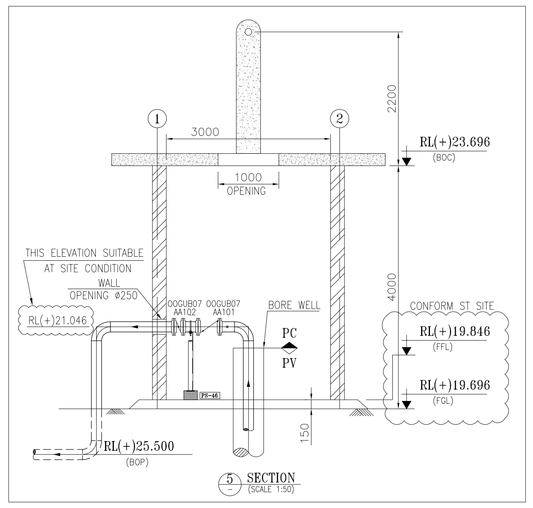

5 SECTION
(SCALE 1:50)

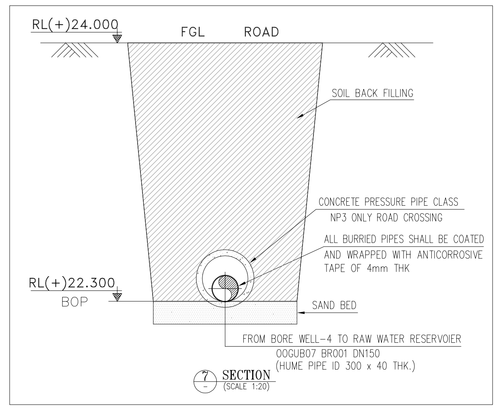

7 SECTION
(SCALE 1:20)

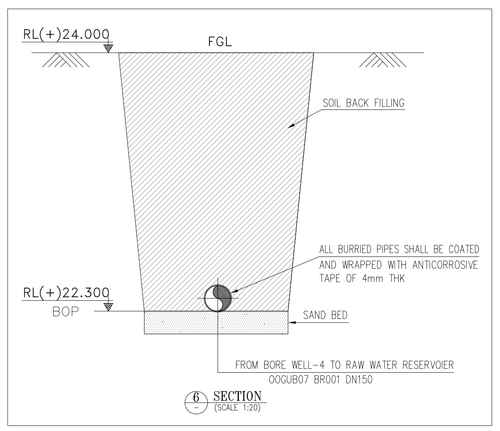

6 SECTION
(SCALE 1:20)

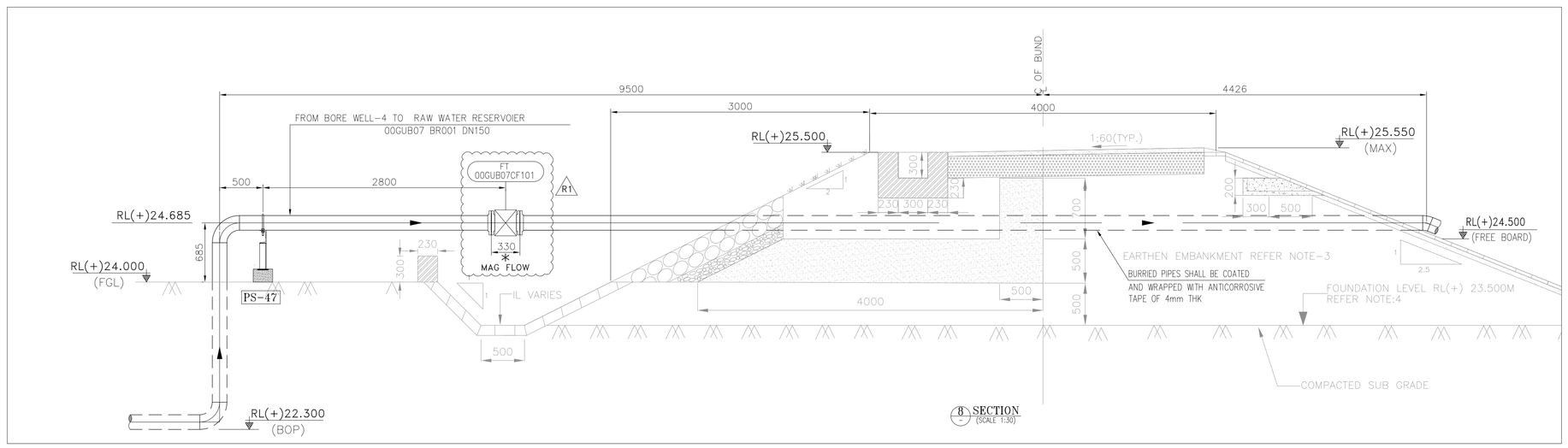

8 SECTION
(SCALE 1:50)

NOTES:-

1. NOTES AND LEGENDS REFER SHEET 1 OF 3.

REV.	DATE	DESCRIPTION	DRN.	STR.	MECH.	ELEC.	INST.
R1	25.02.14	REVISED AS PER CLIENTS COMMENTS	MJR		AS		
R0	23.01.14	FOR APPROVAL	MJR		AS		

APPROVED BY

FICHTNER
Consulting Engineers
(India) Private Limited
Chennai

ONGC TRIPURA POWER COMPANY PRIVATE LIMITED.
726.6 MW COMBINED CYCLE POWER PROJECT
PALLATANA, TRIPURA

	SIGNATURE	DATE
DRAWN	MJR	23.01.14
DESIGNED	MJR	23.01.14
CHECKED	AS	23.01.14
DEPT.HEAD	GR	23.01.14
PROJ.MGR.	DKS/RUV	23.01.14

RELEASED FOR: PRELIMINARY / TENDER ✓ / ENGINEERING

TITLE: PIPING LAYOUT FOR TUBE WELL-4 AND STORM WATER PIT-2 TO RAW WATER RESERVOIR

DEPT. MECH | JOB NO. 1113112 | SCALE: 1:100 | REV. R1

DWG.NO. 00-1113112-M-013

SHT.3 OF 3

FILE NAME: